Ipad air backlight abnormal

Replacing an iPad air failure phenomenon The backlight on the left side of the screen is intermittently dark.The disassemble uses a multimeter diode to display the diode value of the row of seats, and finds that the backlight group AB VCC has four feet, two of which have infinity values.Placed under the microscope and found a fuse Inductor burned.Use the soldering iron to iron the Inductor and short-circuit it with solder. The power-on test shows normal.



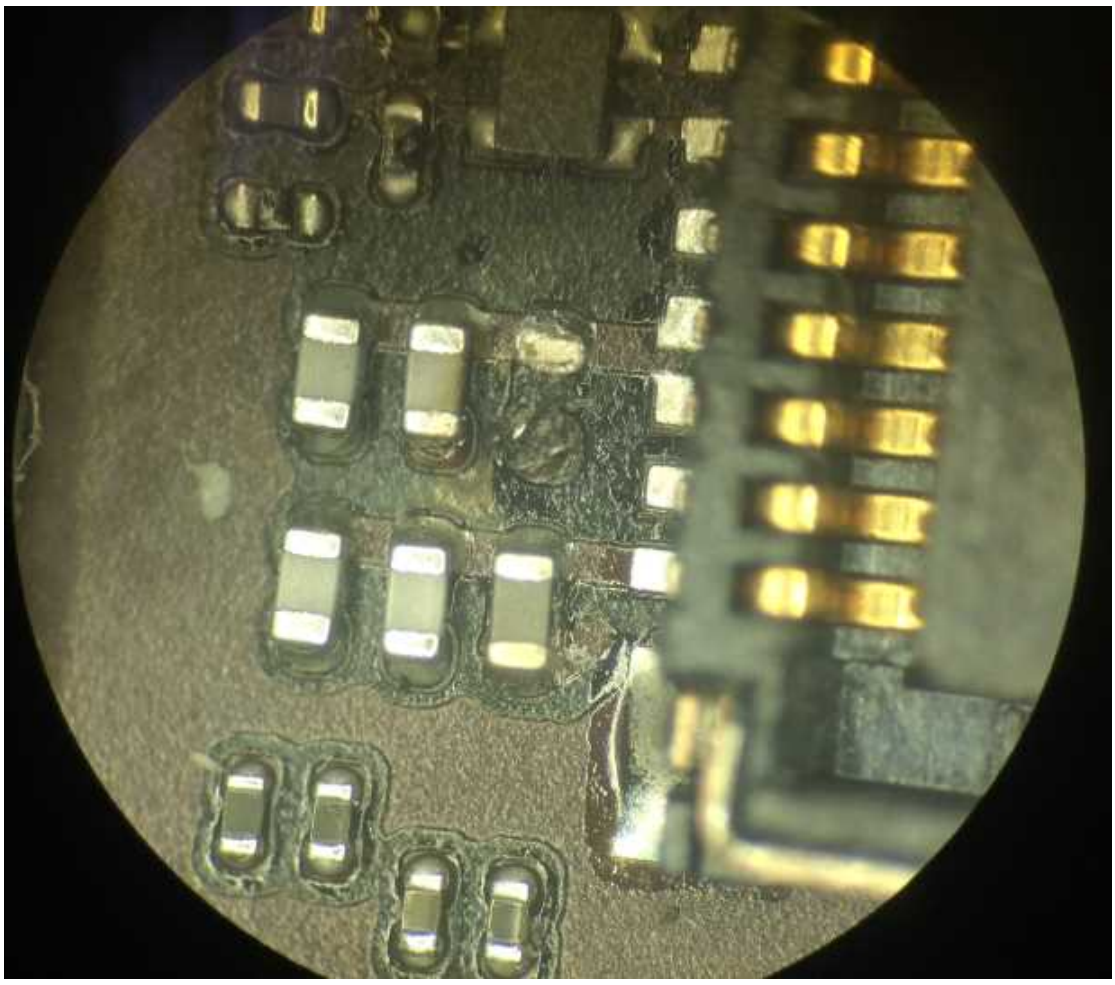

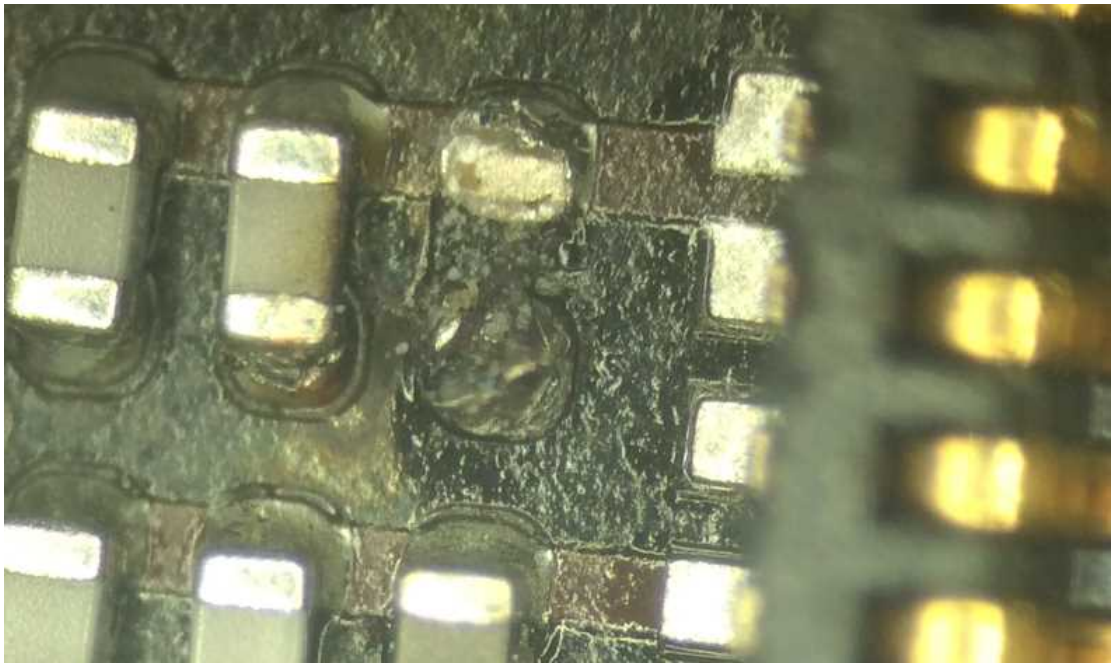

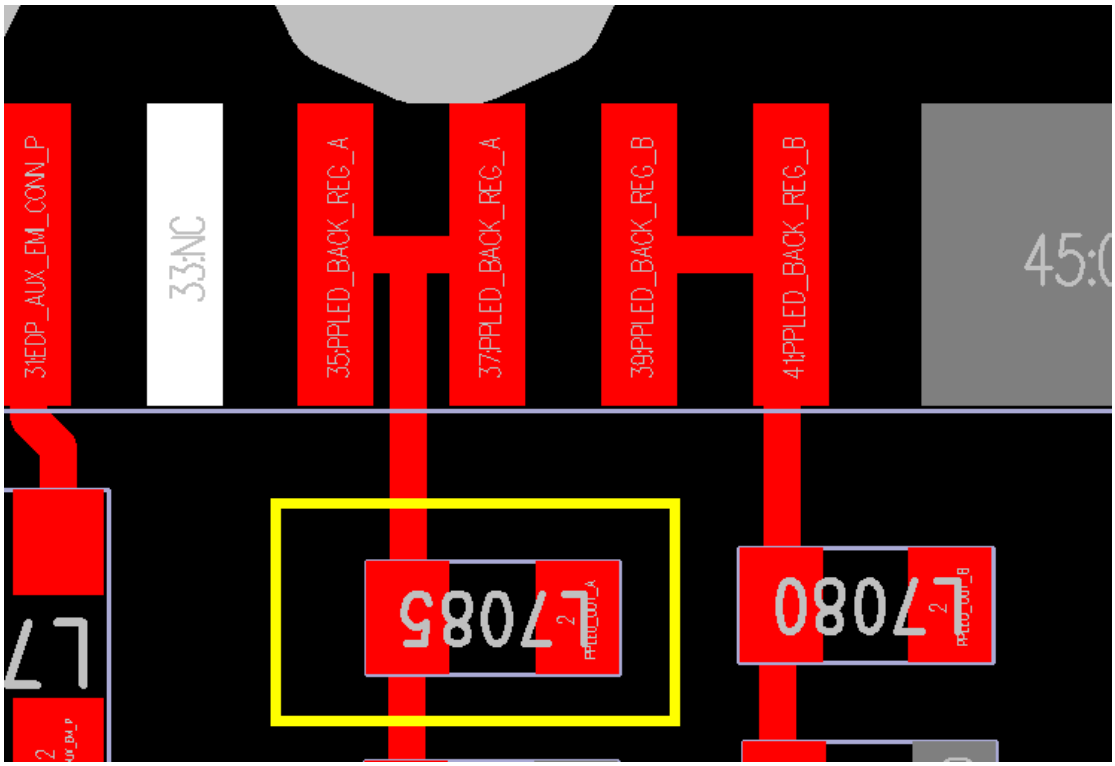
31EDP_AUX_EM_CONN_P
33:NC
35:PPLED_BACK_REG_A
37:PPLED_BACK_REG_A
39:PPLED_BACK_REG_B
41:PPLED_BACK_REG_B
45:0
L7085
L7080

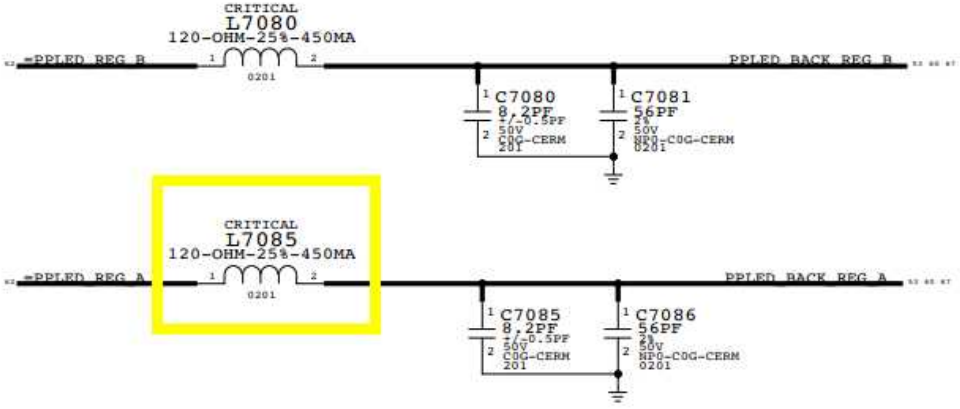
CRITICAL
L7080
120-OHM-25%-450MA
0201
=PPLED_REG_B
PPLED_BACK_REG_B
C7080
8.2PF
±0.5PF
50V
C0G-CERM
201
C7081
56PF
5%
50V
NP0-C0G-CERM
0201
CRITICAL
L7085
120-OHM-25%-450MA
0201
=PPLED_REG_A
PPLED_BACK_REG_A
C7085
8.2PF
±0.5PF
50V
C0G-CERM
201
C7086
56PF
5%
50V
NP0-C0G-CERM
0201